SKIDDING SYSTEM HEAVY 700/867 T

DIMENSIONS AND SPECIFICATIONS

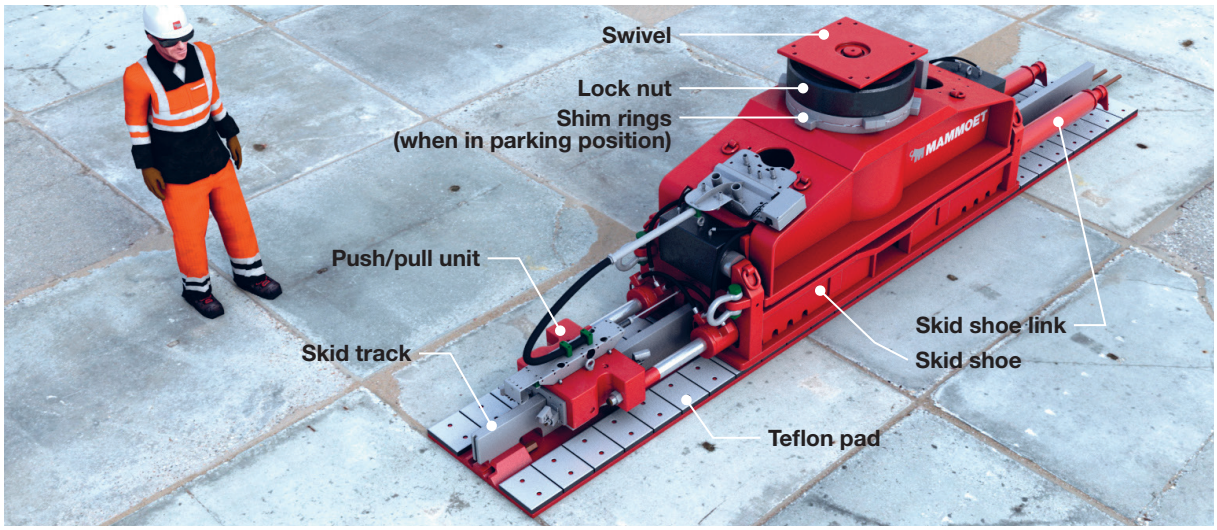

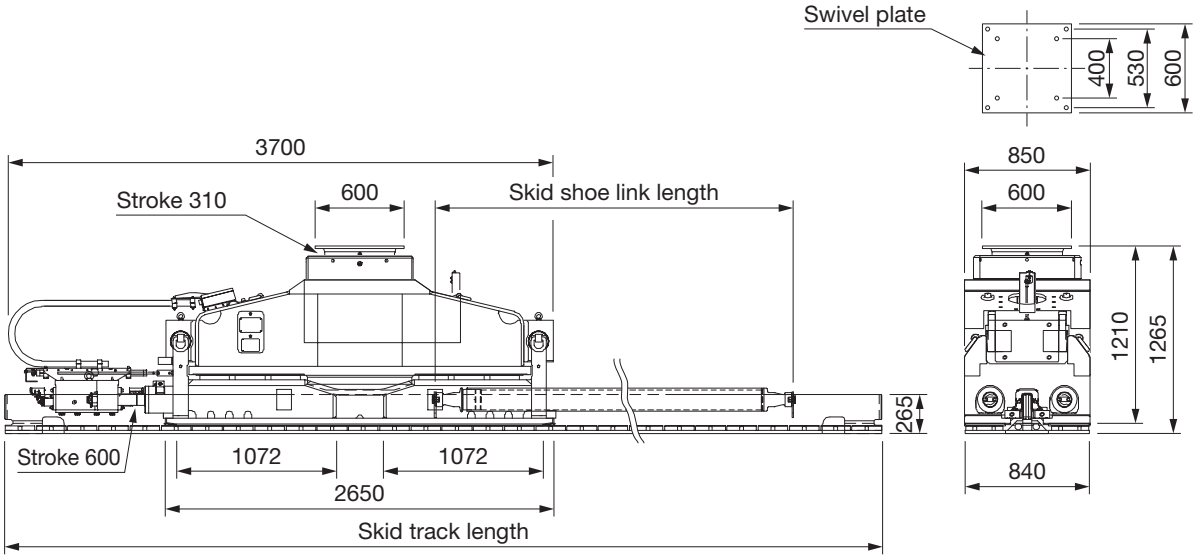

SPECIFICATIONS

Skid shoe	
Capacity	703, 867[1] t [2]
Stroke	310 mm
Side shift stroke, to both sides	55 mm
Side shift capacity	2× 35 t
Maximum side load	5 %
Length, without push/pull unit	2650 mm
Length, with push/pull unit	3700 mm
Width	850 mm
Height	1210 mm
Weight, with push/pull unit	7700 kg

Push/pull unit	
Capacity, push/pull	125/90 t
Stroke	600 mm

Skid shoe link			
Length	2000	2700	3300 mm
Weight	105	137	164 kg

Skid track						
Length [3]	3120	4513	4665	5000	5600	6749 mm
Weight, without Teflon pads	1273	1434	1471	1588	1772	2137 kg

The skidding system heavy 700/867 t uses a special PPU.

[1] Limited number of units available.

[2] Max. foundation settlement 5 mm.

[3] Speak to Mammoet Engineering for the accurate length.

Dimensions are in millimeters, t = metric tons.
The content in this document is mentioned for reference use only. Values may differ from current data. Always contact Mammoet for current project calculations.